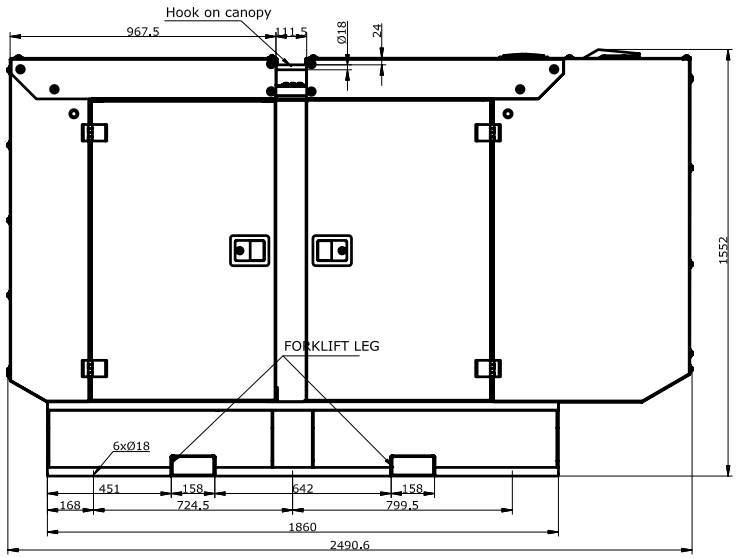

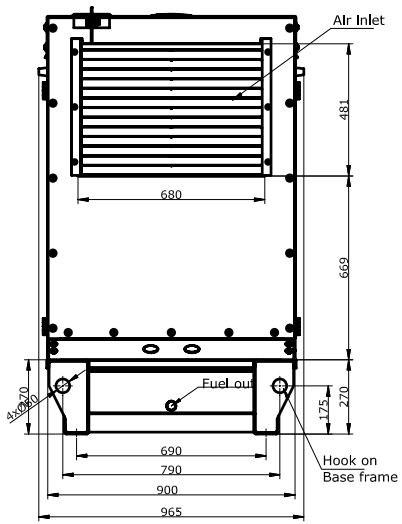

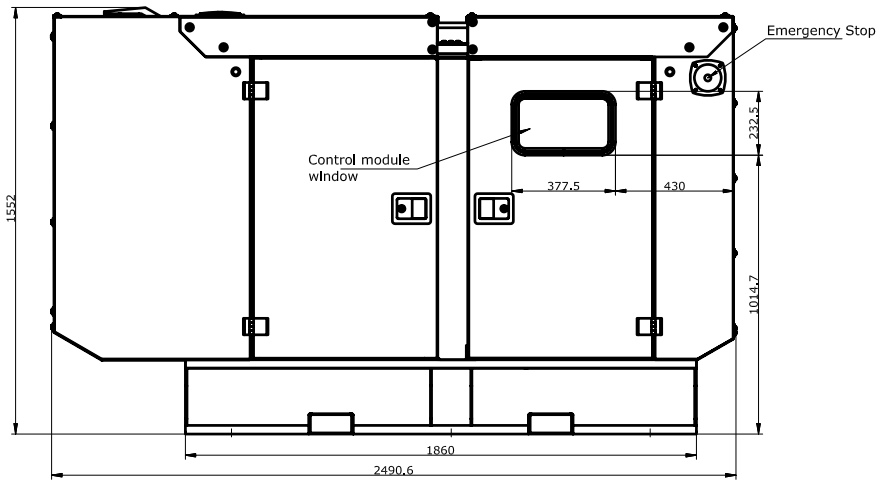

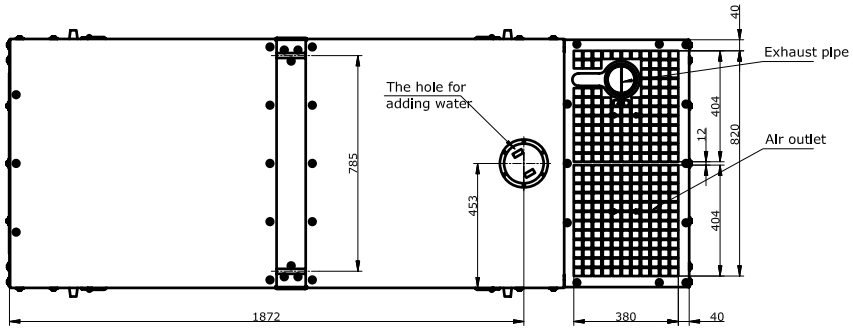

Totol Air inlet area:327000mm^2
Totol Air outlet area:304000mm^2
The diameter of Exhaust pipe:102mm
The Capacity of fuel tank:154L±10%
The Weight of Genset:1350kg
Noise level@1m:86.2dbA
Noise level@7m:77.6dbA
Color of Base frame:RAL9005
Color of Canopy:RAL1003

ORDER CODE:				SCALE: 1:20				MATERIAL:		QUANTITY:	WEIGHT:
				2011	DATE	NAME	SIGNATURE	PART NAME: APD50A CANOPY ASSEMBLY GENSET			
				DRAWINGED BY	15/06						
				CONTROLED BY	15/06			USED FOR: APD50A			
				APPROVED BY	15/06						
				DEPARTMENT: ENGINEERING							
								PART NO.:	LOCATION:	A3	
								DRAWING NO.:		PAGE	
SIGN	VARIATION	DATE	NAME	FOUNDATION :				REVISION NO.: 00	ONLY ENGINERRING DEPT. OF AKSA COMP. HAS RIGHT TO KEEP AND MODIFY IT. IT CAN NOT BE SUPPLIED OR COPIED TO THE 3TH ORGANIZATION.		